G2 8111-1.6

CODE NUMBER

3250400

DESCRIPTION

1.6 gpf, Polished Chrome Finish, Single Flush, Battery, G2 Exposed Sensor Water Closet Flushometer.

DETAILS

- Flush Volume: 1.6 gpf (6.0 Lpf)
- Finish: Polished Chrome (CP)
- Power Type: Battery
- Battery Life: 6 years
- Valve: Diaphragm
- Valve Body Material: Semi-red Brass
- Fixture Type: Water Closet
- Fixture Connection: Top spud
- Rough-In Dimension: 11 ½" (292mm)
- Spud Coupling: 1 ½" (38mm)
- Supply Pipe: 1" (25mm)

FEATURES

- Sweat Solder Adapter with Cover Tube and Cast Set Screw Wall Flange
- Handle Packing, Main Seat, Stop Seat and Vacuum Breaker Molded from PERMEX® Rubber Compound for Chloramine resistance
- User friendly three (3) second Flush Delay
- “Low Battery” Flashing LED
- Fixed Metering Bypass and No External Volume Adjustment to Ensure Water Conservation
- Flex Tube Diaphragm designed for improved life and reduced maintenance
- Engineered Metal Cover with replaceable Lens Window
- Courtesy Flush® Override Button
- 1" I.P.S. Screwdriver Bak-Chek® Angle Stop with Vandal Resistant Stop Cap
- Infrared Sensor with Multiple-focused, Lobular Sensing Fields for high and low target detection
- Four (4) Size AA alkaline Batteries included

PERMEX® Synthetic Rubber Diaphragm with Dual Filtered Fixed Bypass

VIDEOS

PVD Special Finishes

COMPLIANCES & CERTIFICATIONS

(ADA Compliant, cUPC Certified, BAA Compliant)

RECOMMENDED SPECIFICATION

Valve Body, Cover, Tailpiece and Control Stop shall be in conformance with ASTM Alloy Classification for Semi- Red Brass. Valve shall be in compliance with the applicable sections of ASSE 1037 and ANSI/ASME 112.19.2.

ELECTRICAL SPECIFICATIONS

- Battery Life: 6 years

VALVE OPERATING PRESSURE (FLOWING)

15–80 PSI (103–552 kPa). Specific fixtures may require greater minimum flowing pressure - consult manufacturer requirements.

DOWNLOADS

- Optima Plus Valve Installation Instructions
- G2 Repair and Maintenance Guide
- Control Stop Repair and Maintenance Guide
- Flush Connections Flanges Repair and Maintenance Guide
- Tail Piece Repair and Maintenance Guide
- Sloan Optima Plus Repair and Maintenance Guide
- Additional Downloads

NOTES

All information contained within this document subject to change without notice.

Looking for other variations of the G2 8111 product? View the general spec sheet with all options.

Find a compatible urinal for this flushometer.
Find a compatible water closet for this flushometer.

Sloan 10500 Seymour Ave, Franklin Park, IL 60131
Phone: 800.982.5839 • Fax: 800.447.8329 • sloan.com

ROUGH-IN

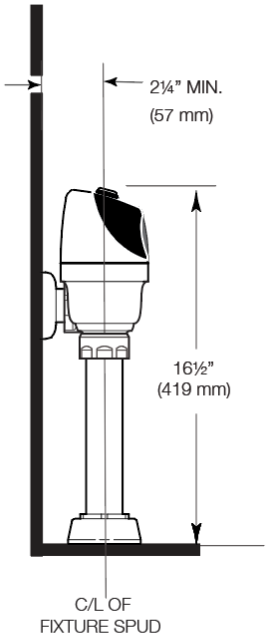

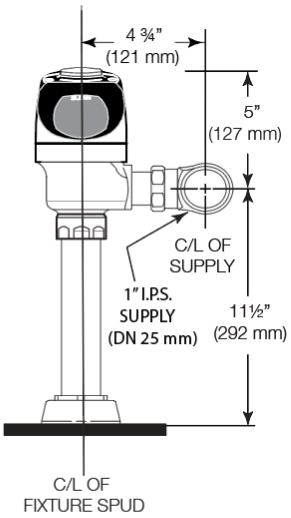

ALTERNATE ADA INSTALLATION

Lower water supply rough-in to 10" (254 mm) and mount grab bar at the 36" (914 mm) maximum allowed height (top of grab bar at 36").

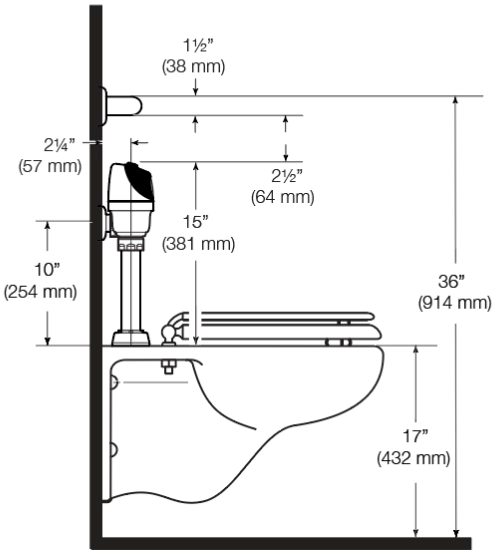

WHEN INSTALLING IN A HANDICAP STALL:

Per the ADA Guildlines (section 604.9.4) it is recommended that the grab bars be split or shifted to the wide side of the stall. If grab bars must be present over the valve, use the alternate ADA installation as shown to the right.

Sloan 10500 Seymour Ave, Franklin Park, IL 60131
Phone: 800.982.5839 • Fax: 800.447.8329 • sloan.com